DC Inverter Air to Water Heat Pump

--heat*STAR*

heat*STAR*

Amitime's heatSTAR system has been developed with the idea in mind for maximum possible energy savings, through its ultra high SCOP rating and quiet operation. Latest development in DC inverter technologies and their application in various internal components including compressor, fan, and water pump, has been the major player in the success of our heatSTAR line.

DC Inverter Air to Water Heat Pump

--heat*STAR* - Split

heat*STAR* Series(R410A)

Split Type

6kW

9kW

11kW

13kW

Monoblock Type

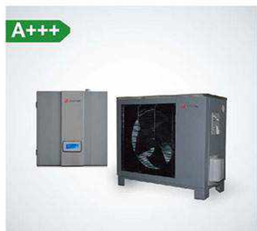

6kW

9kW

11kW

13kW

All-in-one Type

6kW

9kW

11kW

13kW

Note: Capacity mentioned here is for easy reference of the unit, rough values based on unit output at A7/W35 testing condition.

Application

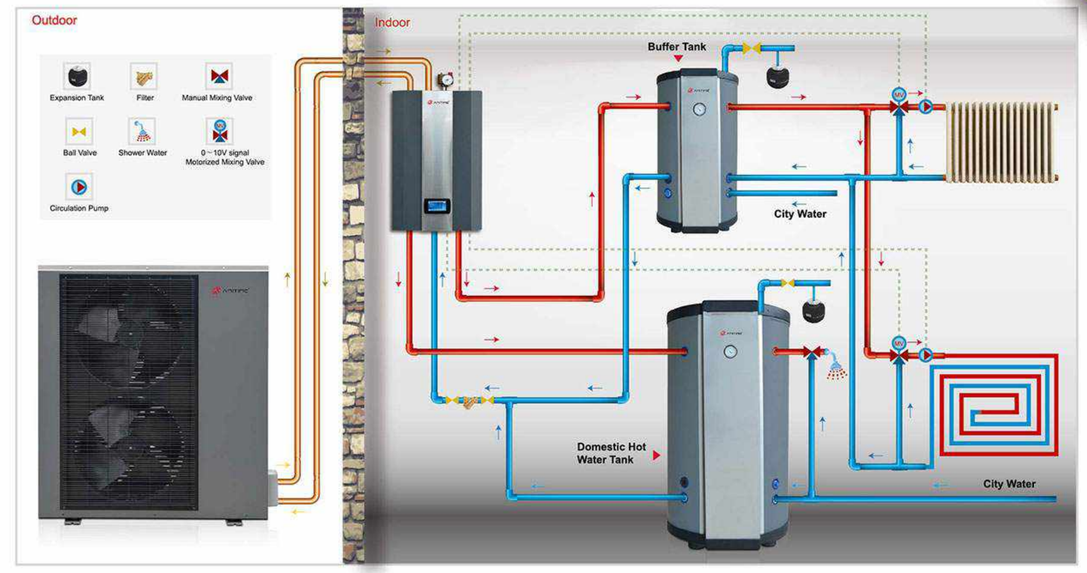

Technical Data

Unit Name			heatSTAR6S	heatSTAR9S	heatSTAR11S	heatSTAR13S
Model			AVH-06V1D*-II	AVH-09V1D*-II	AVH-11V1D*-II	AVH-13V1D*-II
Power Supply - Refrigerant		V/Hz/Ph	220-240/50/1 - R410A			
Max. Heating Capacity (1)		kW	6.21	10.10	11.50	12.60
C.O.P (1)		W/W	4.05	4.03	3.82	3.89
Heating Capacity Min./Max. (1)		kW	2.19/6.21	4.33 / 10.10	4.67/11.50	4.20/12.60
Heating Power Input Min./Max. (1)		kW	0.54/1.53	0.975/2.153	0.915/3.029	0.926/3.072
C.O.P Min./Max. (1)		W/W	4.05/5.87	4.02 / 4.65	3.82/5.05	3.89/4.77
Max. Heating Capacity (2)		kW	5.80	9.53	10.70	11.50
C.O.P (2)		W/W	3.22	3.17	2.95	3.08
Heating Capacity Min./Max. (2)		kW	2.05/5.8	4.19 / 9.53	4.14/10.70	3.76/11.50
Heating power input Min./Max. (2)		kW	0.64/1.81	1.23/ 2.99	1.218/3.624	1.267/3.723
C.O.P Min./Max. (2)		W/W	3.22/4.12	3.12 / 3.55	2.95/3.56	2.97/3.28
Max. Cooling Capacity (3)		kW	5.81	6.84	9.20	10.30
E.E.R (3)		W/W	3.51	2.09	2.68	3.29
Cooling Capacity Min./Max. (3)		kW	2.05/5.81	4.10/ 6.84	4.33/9.20	4.29/10.37
Cooling Power Input Min./Max. (3)		kW	0.768/2.105	1.230 / 3.280	0.993/3.465	0.957/3.156
E.E.R Min./Max. (3)		W/W	3.15/4.71	2.09/3.32	2.685/4.11	3.29/4.63
Max. Cooling Capacity (4)		kW	4.50	5.05	6.74	7.90
E.E.R (4)		W/W	2.52	1.58	2.15	2.63
Cooling Capacity Min./Max. (4)		kW	1.59/4.5	2.34 / 5.05	2.17/6.74	2.34/7.91
Cooling Power Input Min./Max. (4)		kW.	0.614/1.74	1.080/ 3.200	0.924/3.132	1.00/3.012
E.E.R Min./Max. (4)		W/W	2.52/4.32	1.58 / 2.40	2.15/3.00	2.33/3.12
Compressor	Type- Quantity/System		Twin Rotary / 1			
Fan	Quantity		1			2
	Airflow	m^3/h	2700	3000	3100	4200
	Rated power	W	65	76	76	150
Noise Level	Indoor/Outdoor	dB(A)	35/52	35/56	30/56	30/59
Water Side Heat Exchanger	Type		Plate Heat Exchanger			
	Water Pressure Drop	kPa	20	23	23	26
	Piping Connection	Inch	G1″			
Allowable Water Flow	Min. /Rated./Max.	L/S	0.19/0.29/0.33	0.24 / 0.395 / 0.48	0.31 / 0.52 / 0.62	0.37 / 0.61 / 0.73
Net / Packing Dimension (LxDxH)	Indoor Unit	mm	790×288×505 / 970×350×590	790×288×505 / 970×350×590	790×288×505 / 970×350×590	790×288×505 / 970×350×590
	Outdoor Unit	mm	934×354×753 / 990×440×810	934×354×753 / 990×440×810	1044×414×763 / 1130×500×815	1123×400×1195 / 1160×490×1330
Net / Shipping Weight	Indoor Unit	Kg	45 / 50	45 / 50	45 / 50	45 / 50
	Outdoor Unit	Kg	62.50 / 72.50	62.50 / 72.50	65 / 75	113 / 123

Note: (1) Heating condition: Water inlet/outlet temperature: 30℃/35℃, Ambient temperature: DB 7℃/WB 6℃;
(2) Heating condition: Water inlet/outlet temperature: 40℃/45℃, Ambient temperature: DB 7℃/WB 6℃;
(3) Cooling condition: Water inlet/outlet temperature: 23℃/18℃, Ambient temperature: 35℃;
(4) Cooling condition: Water inlet/outlet temperature: 12℃/7℃, Ambient temperature: 35℃.
(5) The specifications are subject to change without prior notice. For actual specifications of unit, please refer to the stickers on the unit.
(6) Performance tested as per EN14511-2007.

DC Inverter Air to Water Heat Pump

--heat*STAR* - Monoblock

heat*STAR* - *Monoblock(R410A)*

Monoblock System: As the name suggests, monoblock equipment are packaged equipment, where all components of the entire system is housed within a single piece of equipment. Monoblock equipment must be located outdoors. The advantages of the monoblock systems are: easy installation and no additional refrigerant piping requirement. It can be simply plumbed to your house's heating system using water connections. Amitime also offers a semi monoblock system, where only a small part of the hydrolic circuitry is separated from the main unit and just as full monoblock systems, requires only simple plumbing connections.

R410A range

Hydro Box

6kW

9kW

13kW

11kW

Application

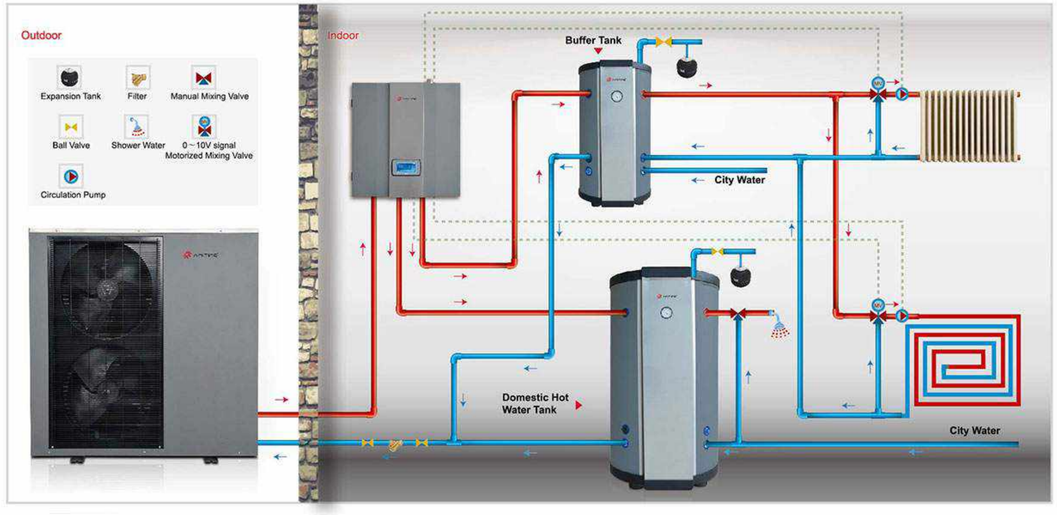

Technical Data

Unit Name			heatSTAR6M	heatSTAR9M	heatSTAR11M	heatSTAR13M
Model			PAVH-06V1D*-II	PAVH-09V1D*-II	PAVH-11V1D*-II	PAVH-13V1D*-II
Power Supply / Refrigerant		V/Hz/Ph	220-240/50/1 - R410A			
Max. Heating Capacity (1)		kW	6.21	10.1	11.5	12.6
C.O.P (1)		W/W	4.05	4.03	3.82	3.89
Heating Capacity Min./Max.(1)		kW	2.19/6.21	4.33/10.10	4.67/11.5	4.2/12.6
Heating Power Input Min./Max.(1)		W	540/1530	975/2153	915/3029	926/3072
C.O.P Min./Max.(1)		W/W	4.05/5.87	4.02/4.65	3.82/5.05	3.89/4.77
Max. Heating Capacity(2)		kW	5.8	9.53	10.7	11.5
C.O.P (2)		W/W	3.22	3.17	2.95	3.08
Heating Capacity Min./Max.(2)		kW	2.05/5.8	4.19/9.53	4.14/10.7	3.76/11.5
Heating power input Min./Max.(2)		W	640/1810	1230/2990	1218/3624	1267/3723
C.O.P Min./Max.(2)		W/W	3.22/4.12	3.12/3.55	2.95/3.56	2.97/3.28
Max. Cooling Capacity(3)		kW	5.81	6.84	9.2	10.3
E.E.R (3)		W/W	3.51	2.09	2.68	3.29
Cooling Capacity Min./Max.(3)		kW	2.05/5.81	4.10/6.84	4.33/9.2	4.29/10.37
Cooling Power Input Min./Max.(3)		W	768/2105	1230/3280	993/3465	957/3156
E.E.R Min./Max.(3)		W/W	3.15/4.71	2.09/3.32	2.685/4.11	3.29/4.63
Max. Cooling Capacity(4)		kW	4.5	5.05	6.74	7.9
E.E.R(4)		W/W	2.52	1.58	2.15	2.63
Cooling Capacity Min./Max.(4)		kW	1.59/4.5	2.34/5.05	2.17/6.74	2.34/7.91
Cooling Power Input Min./Max.(4)		W	614/1740	1080/3200	924/3132	1000/3012
E.E.R Min./Max.(4)		W/W	2.52/4.32	1.58/2.40	2.15/3.0	2.33/3.12
Compressor	Type - Quantity/System		Twin Rotary - 1			
Fan	Quantity		1			2
	Airflow	m^3/h	2700	3000	3100	4200
	Rated power	W	65	76	76	150
Noise Level	Indoor/Outdoor	dB(A)	30/52	30/56	30/56	30/56
Water Side Heat Exchanger	Type		Plate Heat Exchanger			
	Water Pressure Drop	kPa	20	23	23	26
	Piping Connection	Inch	G1"			
Allowable Water Flow	Min./Rated./Max.	L/S	0.19/0.29/0.33	0.24/0.359/0.48	0.31/0.52/0.62	0.37/0.61/0.73
Net Dimension(L×D×H)	Indoor Unit	mm	570×550×255			
	Outdoor Unit	mm	1064*353*754	1064*353*754	1215*415*760	1253×460×1195
Net Weight	Indoor Unit	Kg	25			
	Outdoor Unit	Kg	76	81	85	140

Note: (1) Heating condition: water inlet/outlet temperature: 30℃/35℃, Ambient temperature: DB 7℃/WB 6℃;
(2) Heating condition: water inlet/outlet temperature: 40℃/45℃, Ambient temperature: DB 7℃/WB 6℃;
(3) Cooling condition: water inlet/outlet temperature: 23℃/18℃, Ambient temperature: DB35℃/WB24℃;
(4) Cooling condition: water inlet/outlet temperature: 12℃/7℃, Ambient temperature: DB35℃/WB24℃;
(5) The specifications are subject to change without prior notice. For actual specifications of unit, please refer to the stickers on the unit.

DC Inverter Air to Water Heat Pump

--heat*STAR* - All-in-one

heat*STAR* - *All-in-one(R410A)*

All In One System: are split systems combining a water tank in its indoor section. This structure minimizes the installation of a water tank in the house.

Unit Schematic Drawing

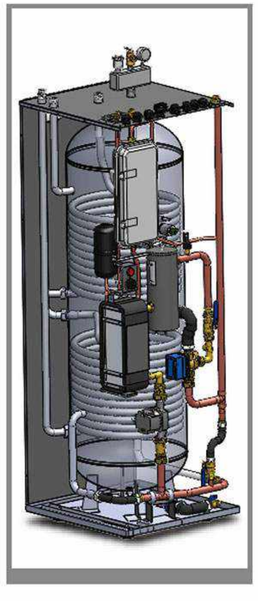

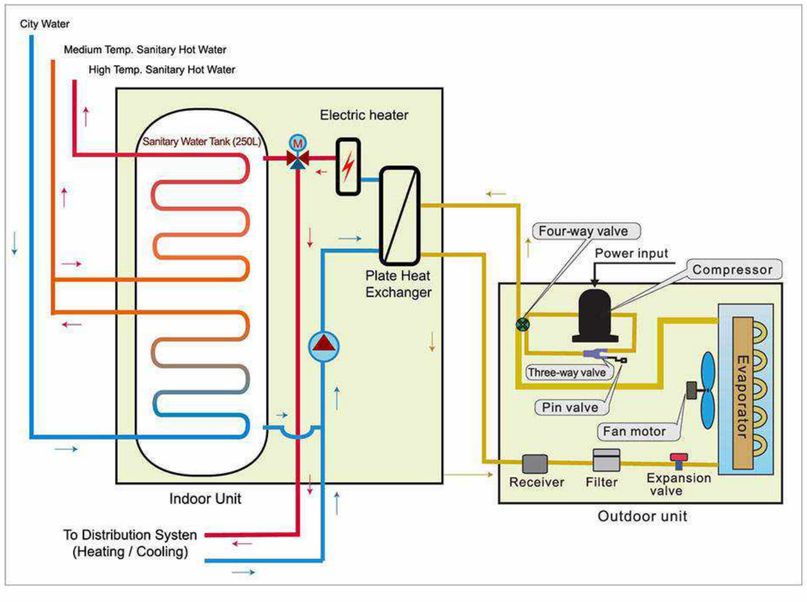

Application

Technical Data

Unit Name			heatSTAR6A	heatSTAR9A	heatSTAR11A	heatSTAR13A
Model			PAVH-06V1D*-250L-II	PAVH-09V1D*-250L-II	PAVH-11V1D*-250L-II	PAVH-13V1D*-250L-II
Power Supply - Refrigerant		V/Hz/Ph	220-240/50/1 - R410A			
Max. Heating Capacity (1)		kW	6.21	10.10	11.50	12.6
C.O.P (1)		W/W	4.05	4.03	3.82	3.89
Heating Capacity Min./Max. (1)		kW	2.19/6.21	4.33/10.10	4.67/11.5	4.2/12.6
Heating Power Input Min./Max. (1)		W	540/1530	975/2153	915/3029	926/3072
C.O.P Min./Max. (1)		W/W	4.05/5.87	4.02/4.65	3.82/5.05	3.89/4.77
Max. Heating Capacity (2)		kW	5.8	9.53	10.70	11.5
C.O.P (2)		W/W	3.22	3.17	2.95	3.08
Heating Capacity Min./Max. (2)		kW	2.05/5.8	4.19/9.53	4.14/10.70	3.76/11.50
Heating Power Input Min./Max. (2)		W	640/1810	1230/2990	1218/3624	1267/3723
C.O.P Min./Max. (2)		W/W	3.22/4.12	3.12/3.55	2.95/3.56	2.97/3.28
Max. Cooling Capacity (3)		kW	5.81	6.84	9.20	10.3
E.E.R (3)		W/W	3.51	2.09	2.68	3.29
Cooling Capacity Min./Max. (3)		kW	2.05/5.81	4.10/6.84	4.33/9.2	4.29/10.37
Cooling Power Input Min./Max. (3)		W	768/2105	1230/3280	993/3465	957/3156
E.E.R Min./Max. (3)		W/W	3.15/4.71	2.09/3.32	2.68/4.11	3.29/4.63
Max. Cooling Capacity (4)		kW	4.5	5.05	6.74	7.9
E.E.R (4)		W/W	2.52	1.58	2.15	2.63
Cooling Capacity Min./Max. (4)		kW	1.59/4.5	2.34/5.05	2.17/6.74	2.34/7.91
Cooling Power Input Min./Max. (4)		W	614/1740	1080/3200	924/3132	1000/3012
E.E.R Min./Max. (4)		W/W	2.52/4.32	1.58/2.40	2.15/3.00	2.33/3.12
Compressor	Type - Quantity/System		Twin Rotary - 1			
Fan	Quantity		1			2
	Airflow	m³/h	2700	3000	3100	4200
	Rated power	W	65	76	76	76×2
Water Side Heat Exchanger	Type		Plate Heat Exchanger			
	Water Pressure Drop	Kpa	20	30		
	Piping Connection	Inch	G1"			
Water Pump	Max Water Head	m	7.5	7.5	7.5	7.5
Noise Level	Outdoor	dB(A)	52	56	56	59
	Indoor		35	35	35	35
Water Volume		L	250			
Range of setting temperature**		℃	30-52-75**	30-52-75**	30-52-75**	30-52-75**
Hot water capacity*		Kg/h	140	240	300	360
Range of working temperature		℃	-25~45	-25~45	-25~45	-25~45
Water pipe connection		inch	G1"			
Max. Pressure of Water		Mpa	0.7			
Inbuilt Electric Heater		kW	2(220-240V/50Hz/1PH)			
Control of 2KW electric heater			Manual			
Inbuilt Electric Heater		kW	6(400V/50Hz/3PH)			
Control of 6KW electric heater			Auto/Manual			
Refrigerant pipe connection		inch	1/4"、1/2"	3/8"、1/2"		
Net / Packing Dimension (L×D×H)	Outdoor Unit	mm	934×354×753/990×440×810	934×354×753/990×440×810	1044×414×763/1130×500×815	1123×400×1195/ 1160x490x1330
	Indoor Unit	mm	600×650×1720/640×695×1914	600×650×1720/640×695×1914	600×650×1720/640×695×1914	600×650×1720/640×695×1914
Net / Shipping Weight	Outdoor	Kg	62.5/72.5	62.5/72.5	65/75	113/123
	Indoor Unit	Kg	140/155	140/155	140/155	138/153

Note: (1) Heating condition: Water inlet/outlet temperature: 30℃/35℃, Ambient temperature: DB 7℃/WB 6℃;
(2) Heating condition: Water inlet/outlet temperature: 40℃/45℃, Ambient temperature: DB 7℃/WB 6℃;
(3) Cooling condition: Water inlet/outlet temperature: 23℃/18℃, Ambient temperature: 35℃;
(4) Cooling condition: Water inlet/outlet temperature: 12℃/7℃, Ambient temperature: 35℃.
(5) Marked with "*" means: Hot water capacity is based on testing condition: DB/WB 20℃/15℃, target water temperature 50℃.
(6) Marked with "**" means: water temperature can reach 52℃ by heat pump, and reach 75℃ by using electric heater simultaneously.
(7) The specifications are subject to change without prior notice. For actual specifications of unit, please refer to the stickers on the unit.
(8) Performance tested as per EN14511-2007.

comfortSTAR - High Efficient Hydraulic

ComfortStar series is an air source heat pump unit. It supplies heated water into hydraulic system, for a radiated heating environment in the house. Thanks to the latest DC inverter technology and the utmost refrigerant flow control system developed by Amitime, this unit ensures you a safe and high-efficiency working throughout the winter.

ComfortStar series is also an air source water chiller unit. It supplies chilled water into hydraulic system, so to provide a more even and gentle cooling solution for your house in hot season.
Patented air channel and compressor chasis guarantee you a quiet operation of the unit, help the unit acheieve a low noise level of a mini split outdoor unit and make it also an ideal solution for apartment buildings.

ComfortSTAR11M

ComfortSTAR16M

ComfortSTAR22M

● Room Temperature Control Function

● Room Temperature Compensation Function

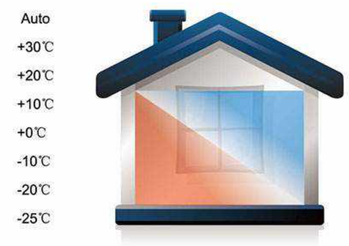

● Auto Heat/Cool Switch-over Mode

● Power Consumption Peak-Evading Function

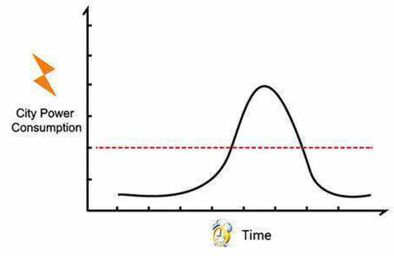

● Technical Data

Model			ComfortSTAR11M	ComfortSTAR16M	ComfortSTAR22M
Power Supply / Refrigerant		V/Hz/Ph	220-240/50/1 - R410A	220-240/50/1 - R410A	380-420/50/3 - R410A
Max. Heating Capacity (1)		kW	13.2	16.9	23.9
C.O.P (1)		W/W	3.51	3.6	3.48
Heating Capacity Min./Max.(1)		kW	4.7 /13.2	7.1/16.9	9.4/23.9
Heating Power Input Min./Max.(1)		W	1.1/3.8	1.5/4.8	2.1/6.9
C.O.P Min./Max.(1)		W/W	3.5/4.3	3.6/4.9	3.5/4.4
Max. Heating Capacity(2)		kW	12.4	16.6	23.5
C.O.P (2)		W/W	2.8	2.9	2.8
Heating Capacity Min./Max.(2)		kW	4.4/12.4	7.0/17.0	9.2/23.5
Heating Power Input Min./Max.(2)		W	1.4/4.5	1.8/5.7	2.7/8.3
C.O.P Min./Max.(2)		W/W	2.8/3.3	2.9/3.8	2.9/3.5
Max. Cooling Capacity(3)		kW	13.5	17.6	23.6
E.E.R (3)		W/W	2.75	2.78	2.83
Cooling Capacity Min./Max.(3)		kW	4.8/14.3	6.2/18.4	7.4/24.2
Cooling Power Input Min./Max.(3)		W	1.65/5.2	2.1/6.6	8.55/2.45
E.E.R Min./Max.(3)		W/W	2.75/2.9	2.78/2.95	2.83/3.02
Max. Cooling Capacity(4)		kW	11.3	15.8	21.8
E.E.R(4)		W/W	2.65	2.68	2.73
Cooling Capacity Min./Max.(4)		kW	4.3/12.3	5.5/16.5	6.7/22.3
Cooling Power Input Min./Max.(4)		W	1.5/4.26	1.88/5.89	2.27/7.98
E.E.R Min./Max.(4)		W/W	2.65/2.85	2.68/2.92	2.73/2.95
Compressor	Type - Quantity/System		Twin Rotary - 1		
Fan	Quantity		1	1	2
	Airflow	m3/h	3500	6770	6770
	Rated power	W	93	60*2	80*2
Noise Level	Indoor/Outdoor	dB(A)	52	54	58
Water Side Heat Exchanger	Type		Plate Heat Exchanger		
	Water Pressure Drop	kPa	-		
	Piping Connection	Inch	1		
Allowable Water Flow	Min./Rated./Max.	L/S	0.525	0.764	1.05
Net Dimension(L×D×H)	Indoor Unit	mm	-		
	Outdoor Unit	mm	995x390x956	978x390x1389	1097×412×1453
Net Weight	Indoor Unit	kg	-		
	Outdoor Unit	kg	115	148	165

Note: (1) Heating condition: Water inlet/outlet temperature: 30℃/35℃, ambient temperature: DB 7℃/WB 6℃;
(2) Heating condition: Water inlet/outlet temperature: 40℃/45℃, mbient temperature: DB 7℃/WB 6℃;
(3) Cooling condition: Water inlet/outlet temperature: 23℃/18℃, ambient temperature: DB35℃/WB24℃;
(4) Cooling condition: Water inlet/outlet temperature: 12℃/7℃, ambient temperature: DB35℃/WB24℃;
(5) The specifications are subject to change without prior notice. For actual specifications of unit, please refer to the stickers on the unit.

High energy-efficient solution for commercial application

powerSTAR -Light commercial unit, Big saving

powerSTAR -Light commercial unit, Big saving

By using the latest inveter+EVI technology, powerSTAR series is designed as a high energy-efficient and stable heating solution, with wide heating capacity from 30kW to 180kW.

Not only with inverter compressor, it can adjust working speed according to heating demand automatically, to optimize the efficiency of the whole system, but also with EVI technology, it can always provide stable heating output, to minimize your energy consumption in cold winter.

powerSTAR is a simple but powerful solution, which meets heating, cooling and stabel hot water demand for commercial applications, such as apartments, hotels, and schools, etc.

powerSTAR 25/30kW

powerSTAR 45kW

powerSTAR 90kW

Main components

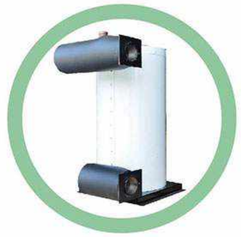

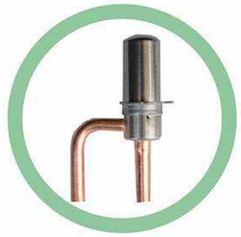

- Famous brand DC INVERTER+EVI compressor, ensures its stable heating capacity in harsh working conditions
- EC fan motor, for a better efficiency and more quiet operation
- Tube in shell heat exchanger with big water circuit, which allows higher tolerance of water quality
- Self-adjusting EEV control enhanced its performance in every conditions
- Sub-cooling pipe prevents water from icing up during defrosting

Inner structure

High energy-efficient solution for commercial application

powerSTAR -Light commercial unit, Big saving

Powerful functions

7'' Touch Screen operation panel

Cascade
One operation panel can control up to 16 units

Heating Curve
Adjust outlet water temp. based on ambient temp. automatically

Modbus
Easy to communicate with BMS for smart building

Run in rotation
When two or more units are connected in the system, every unit runs alternately

WIFI module
Remote control, easy for service

Smart defrosting
Maximum 1/3 of the units are allowed to defrost at same time, for stable temperature of the whole system

Two Mixing Circuits
Two mixing circuits control for different heating zones

Emergency Operation
If master unit is off-line, by turning on the emergency switch, eachheat pump unit can work individually according to last working command

System Sketch

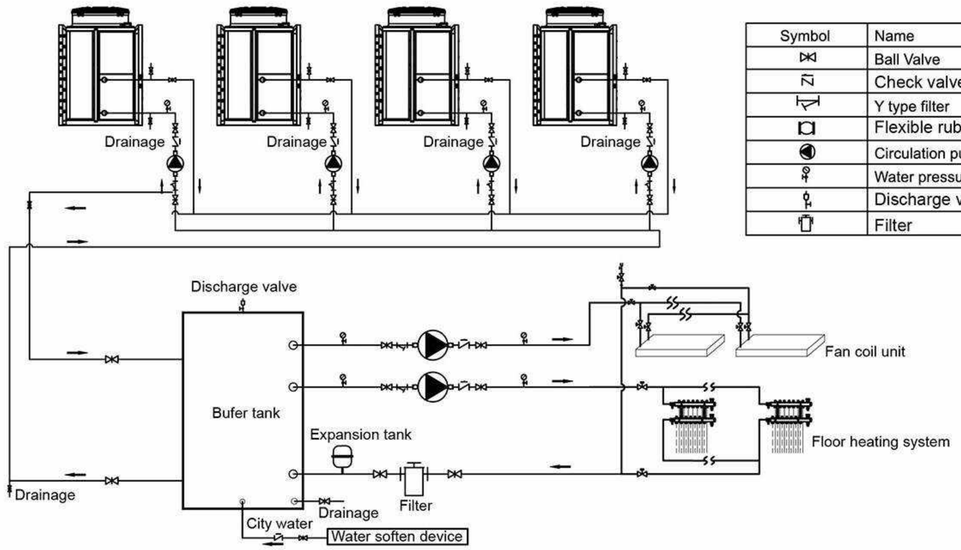

Symbol	Name
	Ball Valve
	Check valve
	Y type filter
	Flexible rubber connection
	Circulation pump
	Water pressure gauge
	Discharge valve
	Filter

Features

A++ High energy efficiency and stable performance
With inverter+ EVI technology, it reaches A++ energy level and COP is up to 4.42

Monoblock design for easy installation

Low noise solution with EC fan motor and improved air duct system

Supply high water temperature up to 60 °C

High energy-efficient solution for commercial application

powerSTAR -Light commercial unit, Big saving

Technical Data

Unit Name			powerSTAR25M	powerSTAR30M	powerSTAR45M	powerSTAR90M
Model			PAEVH-25V4DEA	PAEVH-30V4DEA	PEVH-45V4DA-02	PEVH-90V4DA-01
IP rating		IPXX	IPX4	IPX4	IPX4	IPX4
Power supply	Outdoor unit					
Power supply - Outdoor unit	Fuse Outdoor unit	V / Hz / Ph	400V/50Hz/3Ph	400V/50Hz/3Ph	400V/50Hz/3Ph	400V/50Hz/3Ph
		A	3P/25A/C	3P/25A/C	3P/40A/C	3p/80A/C
Performance						
Min/max heating capacity (1)		kW	7.9~25.1	15.2~28.7	13.7~43.7	27.4~89.6
El. heating power input min/max (1)		W	2564~6172	3467~7488	3325~12077	6650~24254
C.O.P min/max (1)		W/W	3.07~4.41	3.83~4.43	3.62~4.42	3.68~4.50
Min/max heating capacity (2)		kW	9.9~24.8	12.2~29.4	13.6~43.2	28.2~89.5
El. heating power input min/max (2)		W	3141~7625	3769~9035	4156~14308	8212~28300
C.O.P min/max (2)		W/W	3.16~3.43	3.26~3.43	2.99~3.38	3.16~3.48
SCOP - Average climate, low temperature		W	4.04	4.06	4.12	4.2
Energy class			A++	A++	A++	A++
Min/max cooling capacity (3)		kW	10.6~21.5	15.2~26.8	17.7~32.0	36.4~66.0
El. coolimg power input min/max (3)		W	2528~7678	3253~8765	3491~11771	6982~23742
E.E.R. min/max (3)		W/W	2.81~4.20	3.06~4.68	2.72~5.09	2.8~5.19
Min/max cooling capacity (4) (A35/W7)		kW	7.1~18.1	7.3~21.2	11.2~29.9	23.4~61.2
El. cooling power input min/max (4)		W	2570~6746	3121~7960	3529~11640	6880~23450
E.E.R. min/max (4)		W/W	2.46~3.04	2.33~2.84	2.57~3.3	2.61~3.4
Min/max ambient working temp. in heating mode		°C	-30-55	-30-55	-30-55	-30-55
Min/max ambient working temp. in cooling mode		°C	15-55	15-55	15-55	15-55
Max flow temp. in heating mode		°C	60	60	60	60
Min flow temp. in heating mode		°C	20	20	20	20
Min flow temp. in cooling mode		°C	7	7	7	7
Sound power level	Outdoor unit	dB (A)	62	62	66	69
	Indoor unit	dB (A)	/	/	/	/
Components						
Compressor heater		W	30	30	30	30*2
Fan	Quantity	pcs	2	2	1	2
	Airflow	m³/h	5250*2	5250*2	13500	13500*2
	Rated power	W	93*2	93*2	800	800*2
	Blade diameter	mm	552*2	552*2	760	760*2
Titanium tube heat exchanger	Water press. drop	kPa	50	60	80	65
	Piping connection	Inch	1 12" Inner gorve	1 12" Inner gorve	2" Inner gorve	DN65 Flange
Refrigerant	type	/	R410A	R410A	R410A	R410A
	charge	kg	4.4kg	5.2kg	8kg	8kg*2
Compressor	type	/	Inverter+EVI	Inverter+EVI	Inverter+EVI	Inverter+EVI
	Compressor oil	type	FVC68S	FVC68S	FVC68D	FVC68D
	Comp. oil volume	L	1.9	1.9	2.3	2.3L*2
	Compressor heater	W	30	30	30	30*2
	Compressor brand and type		Panasonic, twin rotary	Panasonic, twin rotary	Mitsubishi Electric scroll	Mitsubishi Electric scrol
Hydraulics						I
Minimum water flow		m³/h - l/s	2.8m³/h	2.8m³/h	5m³/h	10m³/h
Nominal water flow		m³/h - l/s	4.3m³/h	5.2m³/h	8m³/h	16m³/h
Hydraulic connections		Size	1 12" Inner gorve	1 12" Inner gorve	2" Inner gorve	DN65 Flange
Dimensions and weight						
Net Dimensions (L x D x H)	Outdoor unit	mm	1215*460*1445	1295*455*1450	1010*1160*1650	2160*1200*1650
	Indoor unit	mm	385*476*150	385*476*150	385*476*150	385x476x150
Brutto Dimensions (L x D x H)	Outdoor unit	mm	1265*480*1580	1325*475*1580	1030*1180*1750	2180x1220x1750
	Indoor unit	mm	400*490*180	400x490x180	400*490*180	400x490x180
Net weight	Outdoor unit	kg	165	180	300	600
	Indoor unit	kg	9	9	9	9
Brutto weight	Outdoor unit	kg	185	200	370	680
	Indoor unit	kg	10	10	10	10
Included with the unit						
Temperature sensors		type	5K,B=3470 5K,B=3950	5K,B=3470 50K,B=3950	5K,B=3470	5K,B=3470
WiFI module		Yes / No	Yes	Yes	Yes	Yes
Communication cable		m	20	20	20	20

Note: (1) Heating condition: water inlet/outlet temperature: 30 °C/35°C, Ambient temperature: DB 7 °C /WB 6 °C;
(2) Heating condition: water inlet/outlet temperature: 40°C/45°C, Ambient temperature: DB 7 °C /WB 6 °C;
(3) Cooling condition: water inlet/outlet temperature: 23 °C/18°C, Ambient temperature: DB 35 °C /WB 24 °C;
(4) Cooling condition: water inlet/outlet temperature: 12°C/7°C, Ambient temperature: DB 35 °C /WB 24 °C.
(5) The specifications are subject to change without prior notice. For actual specifications of unit, please refer to the stickers on the unit.

Dimension--- PAEVH-25V4DEA

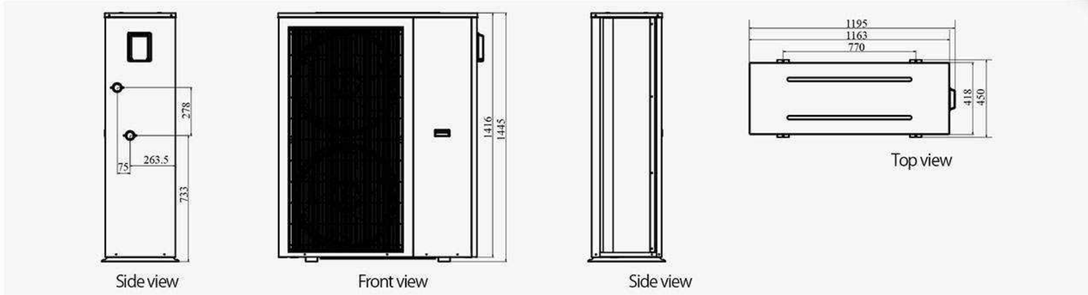

Dimension--- PAEVH-30V4DEA

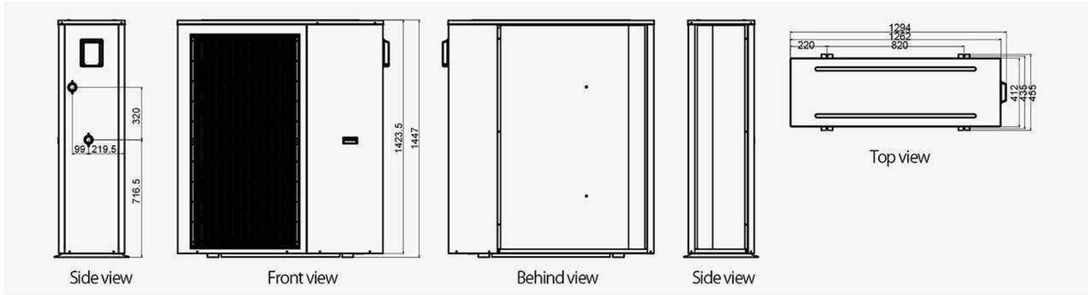

Dimension--- PEVH-45V4DA-02

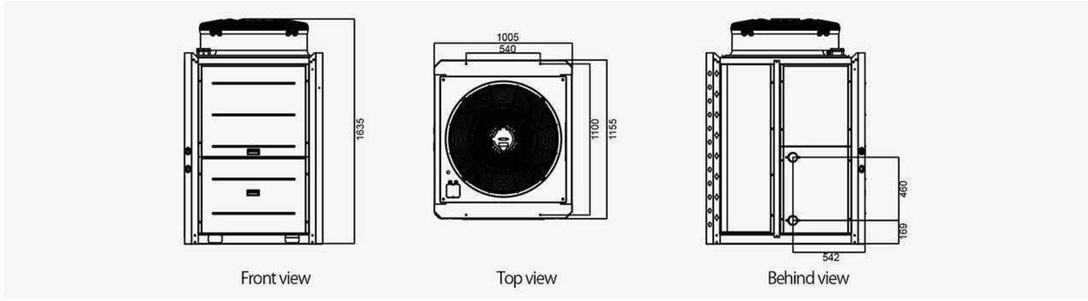

Dimension--- PEVH-90V4DA-01

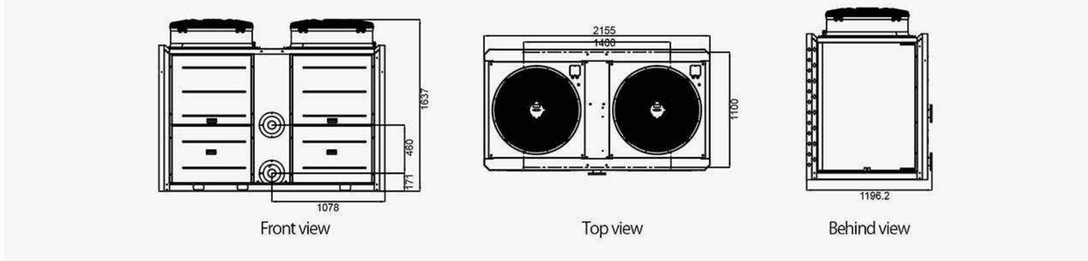

Hydronic Fan Coil Unit

A fan coil unit (FCU) is a heat exchange device consisting of heat exchanger coil and forced air fan. Fan coil units circulate hot or cold water through circuits embedded within the coils and moves the room air over, to heat or cool the air in order to condition a space. Hot or cold water provided through an Amitime heat pump would circulate in the coil, to remove or add heat to the air through heat transfer. Speed control of the fan motor within a fan coil unit is effectively used to control the heating and cooling output desired from the unit. Amitime provides wide range of fan coil units in different styles with DC available motors.

Universal Super-Slim Fan Coil Unit

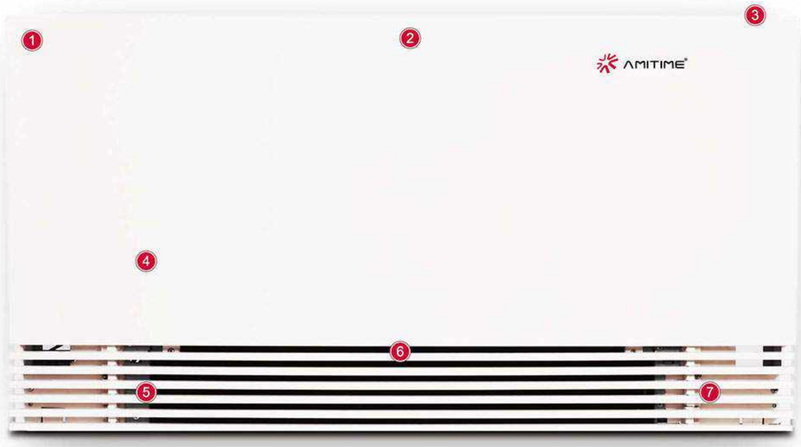

1 Famous Brand Motorized Valve

2 Slim Design Only 130 mm Thick

3 Touch Operation Panel

4 Coil with Hydrophilic Aluminum Fin

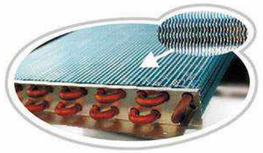

5 Balanced Cross Fan Blower

6 Easy Access to Air Filter

7 Speed Variable DC Motor

Hydronic Fan Coil Unit

Technical Data

Model		BM150	BM350	BM450	BM550
(a) Total Cooling Capacity	kW	0.75	1.50	2.20	3.10
Sensible Cooling Capacity	kW	0.61	1.25	1.90	2.60
Water Flow Rate	l/h	142	302	453	573
Water Pressure Drops	kPa	7.00	9.00	22.00	28.00
(b) Heating Capacity	kW	0.99	2.00	2.80	4.20
Water Flow Rate	l/h	142	302	453	573
Water Pressure Drops	kPa	6.50	7.00	18.50	24.50
(c) Heating Capacity	kW	1.55	3.10	4.60	6.30
Water Flow Rate	l/h	162	343	471	600
Water Pressure Drops	kPa	7.00	7.50	19.00	25.00
Coil Water Content	l	0.48	0.85	1.15	1.48
Maximum Operating Pressure	bar	10	10	10	10
Water Pipe Connector	inches	G1/2	G1/2	G1/2	G1/2
(d) Maximum Air Flow	m3/h	160	320	460	580
(d) Minimum Air Flow	m3/h	50	150	200	300
Power Supply	V/ph/Hz	230/1/50	230/1/50	230/1/50	230/1/50
Maximum Running Current	A	0.12	0.16	0.21	0.24
Maximum Power Input	W	14	23	27	33
(e)Maximum Noise	dB(A)	39	40	42	42.1
(e)Minimum Noise	dB(A)	19.8	18.3	19.1	21
Length	mm	694	894	1094	1294
Height(without feet)	mm	580	580	580	580
Depth	mm	129	129	129	129
Net Weight	kg	16	22	28	34
Gross Weight	kg	18	24	30	36

Note: (a) Cooling: Water inlet/outlet 7/12℃; Room temperature DB/WB 27/19℃.
(b) Heating: Water inlet50℃, water flow rate as in cooling operation; Room temperature 20℃.
(c) Heating: Water inlet 70℃, outlet60℃; Room temperature 20℃.
(d) Air flow measured with clean filter.
(e) Sound pressure level tested as per EN12102:2008 and ISO3745:2012, and certified by Intertek.
(f) The specifications are subject to change without prior notice. For actual specifications of unit, please refer to the stickers on the unit.

Universal Super-Slim Fan Coil Unit

Output Under Different Water Temperature

Fan Speed	Working Mode	Water Inlet Temp (℃)	BM150 Capacity（W）	BM350 Capacity（W）	BM450 Capacity（W）	BM550 Capacity（W）
High Speed	Cooling	7	748	1496	2154	3120
		12	480	960	1412	2066
	Heating	35	552	1104	1558	2103
		38	611	1222	1737	2426
		40	680	1360	1936	2939
		43	756	1511	2102	3045
		45	834	1668	2390	3419
		48	932	1864	2631	3894
		50	994	1987	2837	4227
		53	1072	2145	3138	4467
		55	1120	2240	3539	4778
		58	1193	2387	3789	4991
		60	1284	2567	3860	5414
		63	1337	2674	4175	5705
		65	1394	2787	4289	5744
		68	1459	2917	4547	5968
		70	1553	3106	4629	6335

Output Under Different Water Temperature

Fan Speed	Working Mode	Water Inlet Temp (℃)	BM150 Capacity（W）	BM350 Capacity（W）	BM450 Capacity（W）	BM550 Capacity（W）
Medium Speed	Cooling	7	684	1368	2005	2927
		12	384	767	1116	1907
	Heating	35	496	992	1343	1899
		38	588	1175	1518	2246
		40	624	1248	1825	2658
		43	735	1470	1976	2759
		45	806	1612	2232	3365
		48	898	1795	2523	3629
		50	936	1871	2678	3667
		53	993	1986	3065	4202
		55	1028	2056	3322	4455
		58	1131	2261	3499	4526
		60	1169	2337	3666	5059
		63	1218	2437	3806	5331
		65	1305	2611	3951	5444
		68	1359	2718	4134	5704
		70	1456	2913	4336	6335

Universal Super-Slim Fan Coil Unit

Output Under Different Water Temperature

Fan Speed	Working Mode	Water Inlet Temp (℃)	BM150 Capacity（W）	BM350 Capacity（W）	BM450 Capacity（W）	BM550 Capacity（W）
Low Speed	Cooling	7	574	1148	1834	2536
		12	376	752	1058	1590
	Heating	35	378	756	1166	1636
		38	473	947	1273	2049
		40	553	1106	1514	2290
		43	604	1208	1665	2405
		45	665	1330	1911	2886
		48	722	1443	2163	3040
		50	765	1531	2247	3131
		53	813	1627	2604	3616
		55	868	1736	2818	3843
		58	965	1931	2948	4029
		60	1011	2022	3279	4322
		63	1046	2091	3401	4391
		65	1089	2179	3492	4583
		68	1193	2385	3564	4830
		70	1229	2457	3681	4985

Output Under Different Water Temperature

Fan Speed	Working Mode	Water Inlet Temp (℃)	BM150 Capacity（W）	BM350 Capacity（W）	BM450 Capacity（W）	BM550 Capacity（W）
Super Low Speed	Cooling	7	N/A	N/A	N/A	N/A
		12	N/A	N/A	N/A	N/A
	Heating	35	366	732	1060	1535
		38	405	810	1231	1761
		40	494	989	1474	2047
		43	556	1113	1566	2203
		45	571	1142	1682	2635
		48	662	1323	1861	2807
		50	692	1384	2036	2822
		53	729	1459	2337	3237
		55	754	1509	2468	3485
		58	844	1687	2641	3816
		60	857	1715	2906	3912
		63	932	1865	2987	3965
		65	968	1936	3021	4089
		68	1017	2033	3090	4387
		70	1089	2178	3360	4555

Cases

Cases

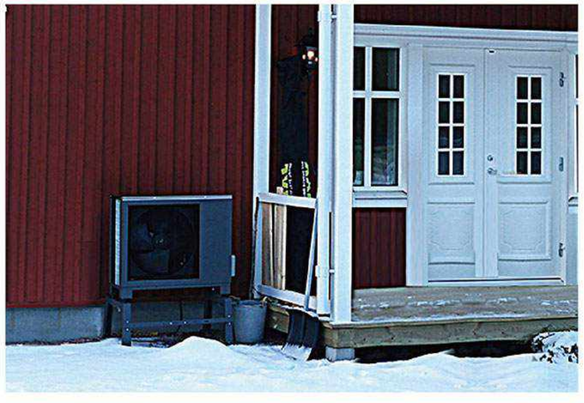

Cases

General technical knowledge

1.Selection of tank for sanitary hot water:

Tank volume	Number of people	Bath	Water consuming for reference
150L	1-3	Not recommended	Water temp：50℃ Shower：40-90L/person Bath：100-120L/time
200L	2-4	Not recommended	
260L	3-5	Not recommended	
300L	3-5	Once for small bathtub	

Note: This information is for your reference only.

2.Choosing of Buffer Tank type

Buffer tank is always recommended to be included in the system, especially when the distribution system has water volume less than 20L/kW.It should be installed between heat pump and distribution system, in order to:

1) Ensure to heat pump unit a stable and enough water flow rate.
2) Store heat to minimize fluctuation of system heating/cooling load.
3) Extend the water volume of distribution system for the proper working of heat pump unit.

Below is the recommended minimum size of a buffer tank selection according to unit capacity:

Type of buffer tank	Heat pump capacity
BFT-30L	6KW-16KW
BFT-60L	16KW-50KW
BFT-100L	60KW-80KW

3.Expansion Tank

For a sealed water system, expansion tank is also a must to ensure the safety of the system. The expansion vessel's volume must be at least 5% of the total water volume in the system. If total water volume of a water system is hard to calculate, below is the recommended minimum size of expansion tank, based on heat pump capacity for your reference:

Expansion tank	Heat pump capacity
AH-5L	6KW-16KW
AH-12L	20KW-40KW
AH-18L	40KW-80KW

4. The Relation Between Current and Copper Wire

Power cable must be big enough to bear the maximum running current of a system. Following is a reference for selecting the size of a power cable, according to the running current of the unit:

Rated current (A)	Cross sectional area (mm2)	
	Flexible wire	Hard wire
X≤3	0.5/0.75	1-2.5
3<X≤6	0.75/1	1-2.5
6<X≤10	1/1.5	1-2.5
10<X≤16	1.5/2.5	1.5-4
16<X≤25	2.5/4	2.5-6
25<X≤32	4/6	4-10
32<X≤40	6/10	6-16
40<X≤63	10/16	10-25