ABB solar inverters

Product manual
PVI-10.0/12.5-TL-OUTD
(10.0 to 12.5 kW)

Power and productivity
for a better world™

Identification of the equipment and the manufacturer

The technical data shown in this manual do not in any case replace those shown on the labels attached to the equipment.

The labels attached to the equipment must NOT be removed, damaged, dirtied, hidden, etc.

The approval label contains the following information:
1. Manufacturer
2. Model
3. Rating data
4. Certification marks

N.B. The labels must NOT be hidden with objects and extraneous parts (rags, boxes, equipment, etc.); they must be cleaned regularly and kept visible at all times.

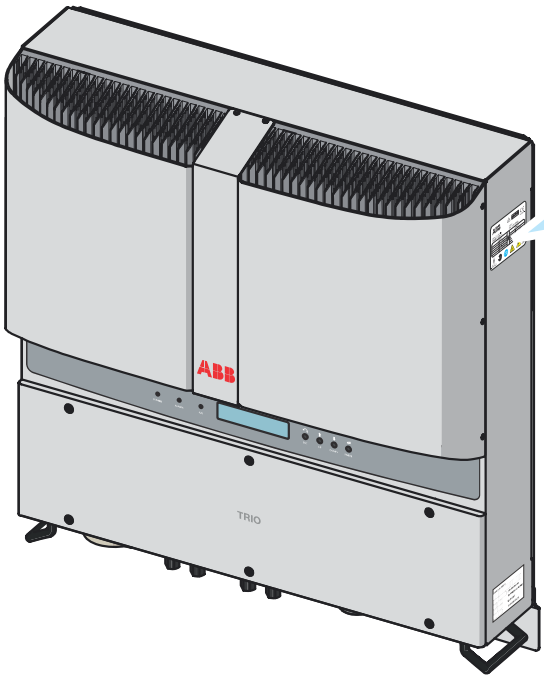

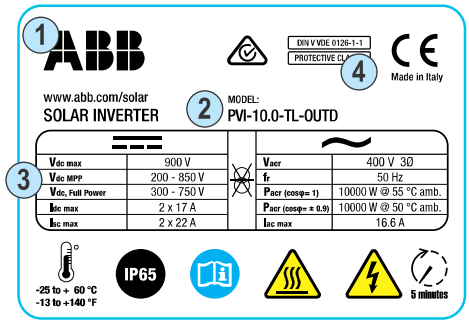

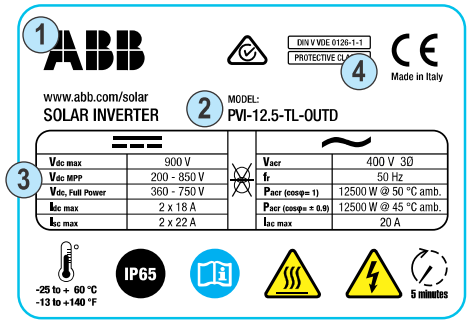

000429CG

In addition to the label showing the specifications of the inverter, there are two part identification labels for the inverter and wiring box.
These labels list the following information:

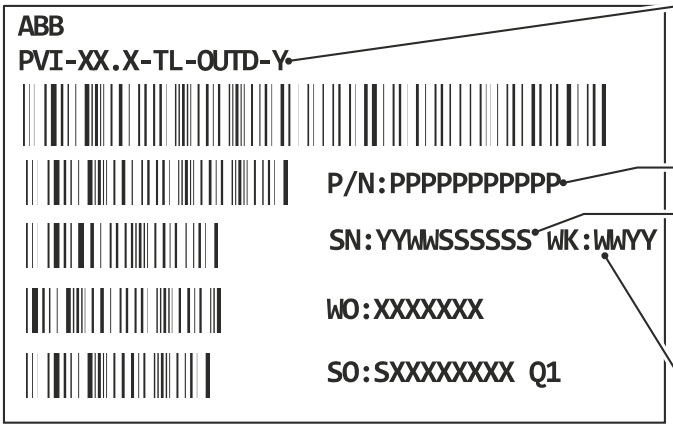

- **Inverter model**
  - **XX.X** = Inverter power rating:
  - **Y** = Integrated disconnect switch / Input fuses board with Integrated disconnect switch
- **Inverter Part Number**
- **Inverter Serial Number** composed of:
  - **YY** = Year of manufacture
  - **WW** = Week of manufacture
  - **SSSSSS** = sequential number
- **Week/Year of manufacture**

The officially required information is located on the approval label. The identification label is an accessory label which shows the information necessary for the identification and characterisation of the inverter by ABB.

N.B. The labels must NOT be hidden with objects and extraneous parts (rags, boxes, equipment, etc.); they must be cleaned regularly and kept visible at all times.

000429CG

Characteristics and technical data

Table: Technical Data	PVI-10.0-TL-OUTD	PVI-12.5-TL-OUTD
Input		
Absolute Maximum Input Voltage ($V_{max,abs}$)	900 V	
Rated Input Voltage (V_{dcr})	580 V	
Input start-up voltage (V_{start})	360 V (adj. 250...500 V)	
Input operating interval (V_{dcmin}...V_{dcmax})	0.7 x Vstart...850 V (min 200 V)	
Input Nominal Power(P_{dcr})	10300 W	12800 W
Number of Independent MPPT	2	
Maximum input power for Each MPPT ($P_{MPPTmax}$)	6500 W	8000 W
Input voltage interval ($V_{MPPTmin}$ ... $V_{MPPTmax}$) to P_{acr} (parallel MPPT configuration)	300…750 V	360...750 V
DC Power limiting for each MPPT with Independent MPPT Configuration to P_{acr}, maximum unbalance example	6500 W [380V≤V_{MPPT}≤750V] other channel: Pdcr-6500W [225V≤V_{MPPT}≤750V]	8000 W [445V≤V_{MPPT}≤750V] other channel: Pdcr-8000W [270V≤V_{MPPT}≤750V]
Maximum DC Input Current (Idcmax) / for each MPPT (IMPPTmax)	34.0 A / 17.0 A	36.0 A / 18.0 A
Maximum Return current (AC side vs DC side)	Negligible	
Number of DC Connection Pairs in Input for each MPPT	2	
DC Input Connector type (components indicated or equivalents)	Quick Fit PV Connector (5)	
Type of photovoltaic panels that can be connected at input according to IEC 61730	Class A	
Input protection		
Reverse Polarity Protection	Inverter protection only, from limited current source, for standard and -S versions, and for -FS version when max 2 strings are connected	
Input Overvoltage protection for each MPPT - Varistors	Yes	
Maximum short-circuit current for each MPPT	22.0 A	
Insulation Check	Complying with the local standard	
DC Disconnect Switch rating (-S Version)	Max. 32.0 A / 1000 V	
Fuse Rating (-FS Version)	gPV / 1000 V / Max. 20.0 A	

000430CG

Table: Technical Data	PVI-10.0-TL-OUTD	PVI-12.5-TL-OUTD
Output		
AC Connection to the grid	Three phase 3W or 4W+PE	
Nominal AC output voltage (V_{acr})	400 V	
Output voltage range (V_{acmin}...V_{acmin})	320...480 V (1)	
Nominal AC Output Power ($P_{acr\ @cos\varphi=1}$)	10000 W	12500 W
Maximum AC Output Power ($P_{acmax\ @cos\varphi=1}$)	11000 W (3)	13800 W (4)
Maximum apparent Output power (S_{max})	11500 VA	13800 VA
Maximum output current (I_{acmax})	16.6 A	20.0 A
Contribution to short-circuit current	19.0 A	22.0 A
Inrush current	Negligible	
Maximum fault current	<25 A rms (100ms)	
Rated Output Frequency (f_r)	50 Hz / 60 Hz	
Output Frequency Range (f_{min}...f_{max})	47...53 Hz / 57…63 Hz (2)	
Nominal Power Factor	> 0.995 (adj. ± 0.9 with Pacr =10.0 kW ± 0.8 with max 11.5kVA)	> 0.995 (adj. ± 0.9 with Pacr =12.5 kW ± 0.8 with max 13.8kVA)
Total Current Harmonic Distortion	< 2%	
AC Connections Type	Screw Terminal block (max cross-section 16 mm²); cable gland M40	
Output protection		
Anti-islanding Protection	Complying with the local standard	
Maximum AC Overcurrent external protection	25.0 A	
Output overvoltage protection - Varistors	4, plus gas arrester	
Operating performance		
Maximum Efficiency (η_{max})	97.8%	
Weighted Efficiency (EURO/CEC)	97.1% / -	97.2% / -
Power Supply Threshold	30.0 W	
Night-Time Consumption	< 1.0 W	
Communication		
Wired Local Monitoring (opt.)	PVI-USB-RS232_485 (opz.)	
Remote Monitoring (opt.)	VSN300 Wifi Logger Card (opz.), PVI-AEC-EVO (opz.), VSN700 Data Logger (opz.)	
Wireless Local Monitoring (opt.)	VSN300 Wifi Logger Card (opz.)	
User Interface	LCD Display with 16 characters x 2 line	

Table: Technical Data	PVI-10.0-TL-OUTD	PVI-12.5-TL-OUTD
Environmental		
Ambient temperature	-25...+60°C -13...140°F with derating above 55°C / 131°F	-25...+60°C -13...140°F with derating above 50°C / 122°F
Storage temperature	-40...80°C (-40...+176°F)	
Relative Humidity	0...100% condensing	
Typical noise emission pressure	50 dbA @ 1 m	
Maximum operating altitude	2000 m / 6560 ft	
Environmental pollution classification for external environment	3	
Environmental Category	External	
Physical		
Environmental Protection Rating	IP 65	
Cooling System	Natural	
Overvoltage rating as per IEC 62109-1	II (DC input) III (AC output)	
Dimensions (H x W x D)	716mm x 645mm x 224mm / 28.2” x 25.4” x 8.8”	
Weight	< 41 kg / 90.4 lb	
Assembly System	Wall bracket	
Safety		
Safety class	I	
Insulation level	Without transformer (TL)	
Marking	CE (only 50Hz), RCM	
Safety and EMC Standards	EN 50178, EN 62109-1, EN 62109-2, AS/NZS 3100, AS/NZS 60950.1, EN 61000-6-2, EN 61000-6-3, EN 61000-3-11, EN 61000-3-12	
Grid Standard	CEI 0-21, CEI 0-16, DIN V VDE 0126-1-1, VDE-AR-N 4105, G59/3, C10/11, EN 50438 (not for all national appendices), RD1699, RD413, RD661, P.O.12.3, AS/NZS 4777.2, AS/NZS 4777.3, IEC 61727, IEC 62116 BDEW, MEA, NRS 097-2-1	

1. The AC voltage range may vary depending on specific country grid standard
2. The Frequency range may vary depending on specific country grid standard
3. Limited to 10000 W for Belgium and Germany
4. Limited to 12500 W for Germany
5. Refer to the document “String inverter – Product Manual appendix” available at www.abb.com/solarinverters to know the brand and the model of the quick fit connector

Remark. Features not specifically listed in the present data sheet are not included in the product

000430CG

Tightening torques

To maintain the IP65 protection of the system and for optimal installation, the following tightening torques must be used:

AC cable gland (11) M40 (ring nut fixing)	**5.0 Nm**
AC cable gland (11) M40 (locknut fixing)	**8.0 Nm**
Service cable glands (12) M20 (ring nut fixing)	**2.5 Nm**
Service cable glands (12) M20 (locknut fixing)	**7.0 Nm**
Front cover (03)	**1.5 Nm**
AC output terminal block (15) - 16 mm² Max	**1.5 Nm**
Alarm terminal block (19) - 1.5 mm² Max	**0.25 Nm**
Signal terminal block (20) - 1.5 mm² Max	**0.25 Nm**

Overall dimensions

The overall dimensions are expressed in millimetres and inches and include the wall installation bracket

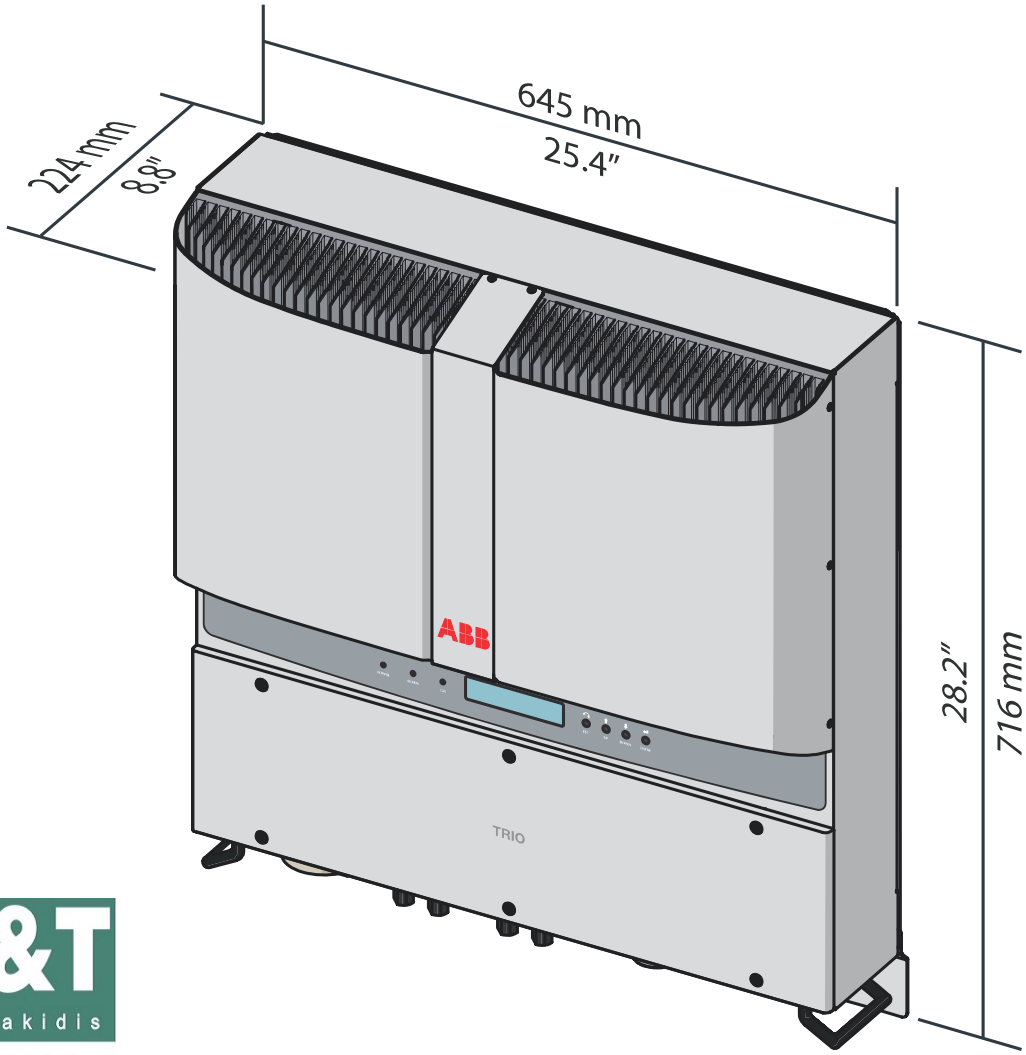

B&T Tsolakidis
Heating · E-shop

000430CG

Bracket dimensions

The wall mounting bracket dimensions are expressed in mm and inches

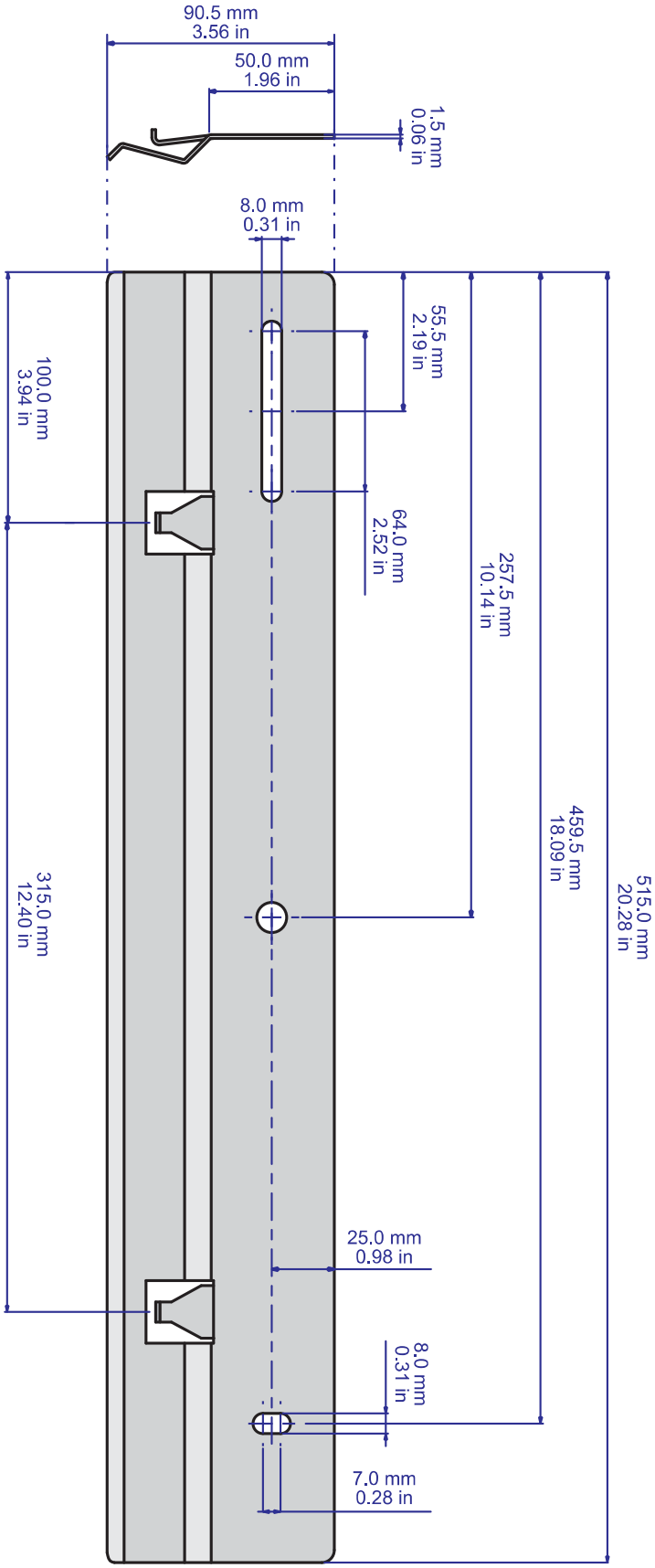

B&T Tsolakidis Heating · E-shop